REV	ECN	CONTENT	CHECK	DATE
V0.0		**ORIGINAL**	YZG	2017.03.12
V1.0		**arrange the drawing**	WL	2019.09.25

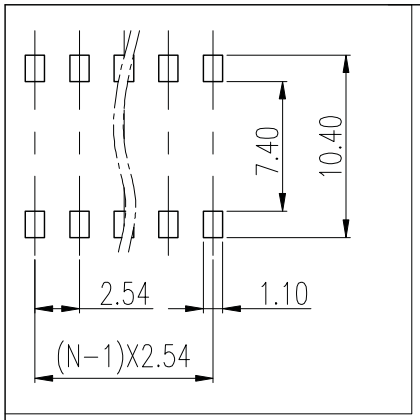

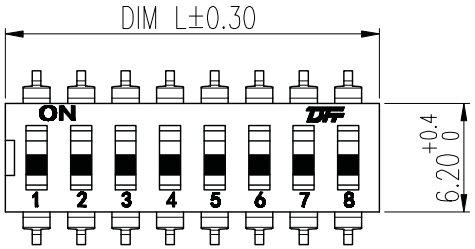

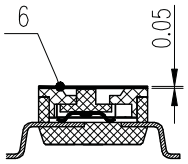

L Type

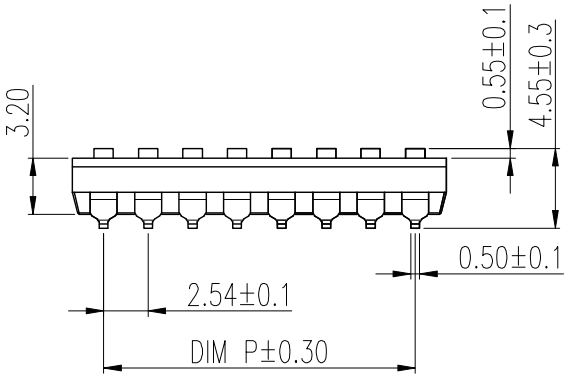

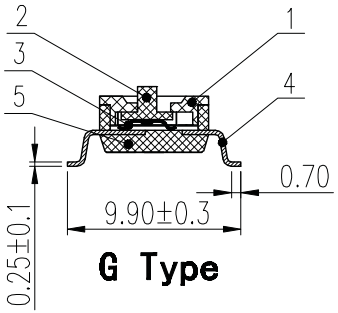

G Type

SPECIFICATION:

1. Rating:
   Switching: 25mA,24VDC
   Non-Switching: 100mA,50VDC
2. Contact Resistance:
   Initial: 50mΩmax
   After Life Test: 100mΩ max
3. Insulation Resistanct:100MΩ min/500 VDC
4. Withstand Voltage:500VAC for 1 minute
5. Operation Force:1000g max
6. Stoke: :0.8mm
7. Mechanical Life:min 2000 cycles
8. Electrical Life:min 2000 cycles/25mA,24VDC
9. Operation Temperature: -40℃~+85℃
10. Storage Temperature: -40℃~+85℃
11. RoHS Compliance

SOLDERING INFORMATION:

Reflow Soldering: 260℃(Peak Temperature),
240℃~260℃,20S max
Manual Soldering: 30W iron,320±5℃, 3S max
Keep in "off" position during soldering

ITEM	NAME OF PART	NO. OF PART	Q'TY	MATERIAL	NOTE
6	Tape(T=0.05)	\	1	Polyimide	Selectable
5	Base	\	1	Thermoplastic	UL94V-0
4	Pin	\	2P	Copper Alloy	Gold Plated
3	Spring	\	P	Copper Alloy	Gold Plated
2	Actuator	\	P	Thermoplastic	UL94V-0
1	Cover	\	1	Thermoplastic	UL94V-0

APP.		DATE		NAME	DM—2.54		
CHK.		DATE					
DWG.		DATE		DWGNO.	W20000062		
UNITS	MM	SCALE	1:1	SHEET	1/1	PROJECTION-METHOD	⊖—

HOW TO ORDER

KF1027 B - XXP - X XX - XXX-XXX

- KF1027: Series No.
- B: B:SMD Type
- XXP: No.of Pole
- X: G:Raised Actuator / L:Flat Actuator
- XX: 00:tube (without Tape) / TR:tape&reel (with Tape)
- XXX-XXX: Customer Request

SCHEMATIC(TYP.)

(1,2,3,4,.....10,11,12,POS AVAIL)

Poles	Dim P	Dim L
1P	--	3.54
2P	2.54	6.08
3P	5.08	8.62
4P	7.62	11.16
5P	10.16	13.70
6P	12.70	16.24
7P	15.24	18.78
8P	17.78	21.32
9P	20.32	23.86
10P	22.86	26.40
11P	25.40	28.94
12P	27.94	31.48

General tolerance in mm						radii and chamfers			shorter angle side			⌯	— //		
over 0.5 to 3	over 3 to 6	over 6 to 30	over 30 to 120	over 120 to 400	over 400 to 1000	over 0.5 to 3	over 3 to 6	over 6	up to 10	over 10 to 50	over 50 to 120	all	over 0 to 100	over 100 to 150	over 150
±0.15	±0.2	±0.25	±0.3	±0.5	±0.8	±0.2	±0.5	±1.0	±1°	±30′	±20′	0.5	0.2	0.3	0.5

慈溪市速腾电子有限公司
CIXI SUTENG ELECTRONIC CO., LTD